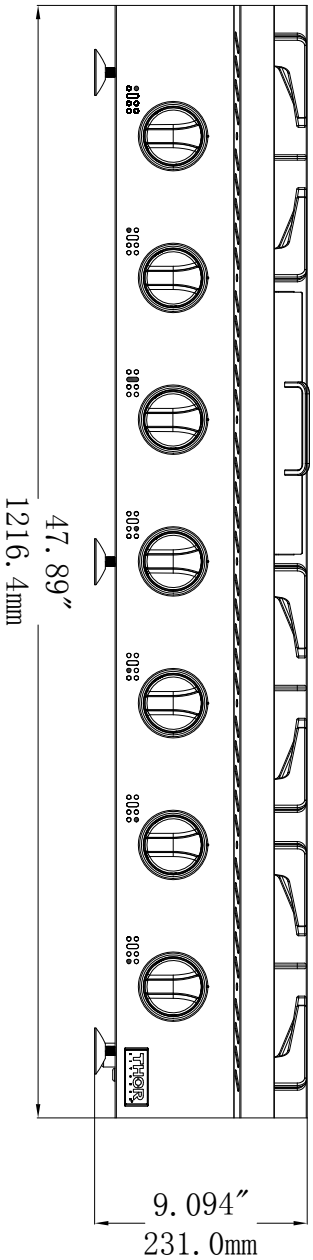
47.89″
1216.4mm
9.094″
231.0mm

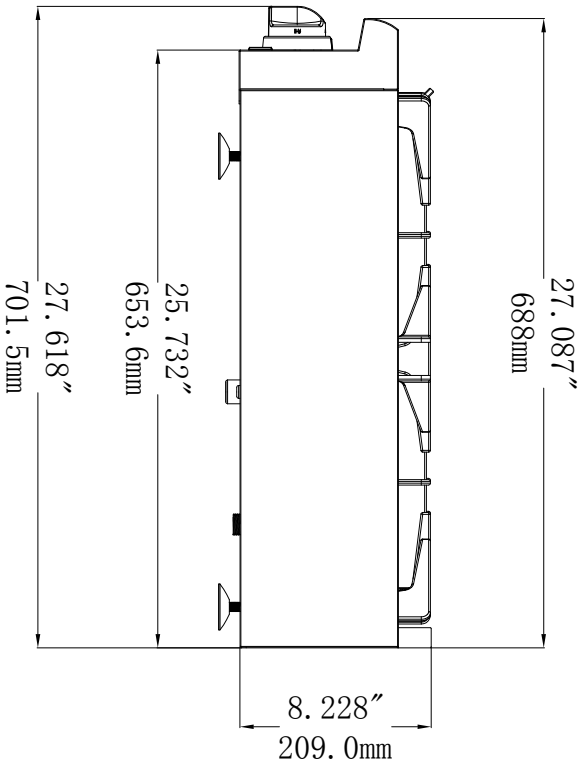
27.618″
701.5mm
25.732″
653.6mm
27.087″
688mm
8.228″
209.0mm